AC METAL FACE FERROUS/NON-FERROUS SENSING (Teflon Coating)

Diameter	M 18		M18	
● Shielded ○ non-Shielded	●	○	●	○
Switching Distance Sn mm	5 mm	8 mm	5 mm	8 mm
Housing Material	SUS 303 stainless steel		SUS 303 stainless steel	
● With LED ○ Without LED	●		●	
Dimensions (unit: mm)	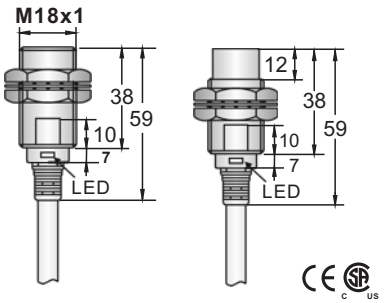		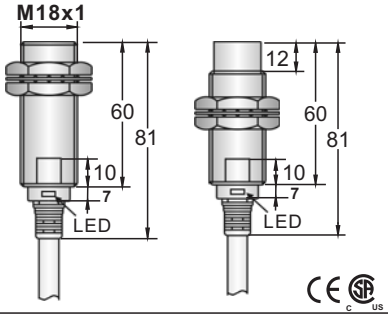	
Operating Voltage	20-250VAC		20-250VAC	
Ripple	-		-	
No Load Current	<1.8mA		<1.8mA	
Max. Load Current	400mA		400mA	
Leakge Current	<1.8mA		<1.8mA	
Surge Current	5A(20ms)		5A(20ms)	
Min. Load Current	5mA		5mA	
Voltage Drop	<8VAC AT 400MA		<8VAC AT 400MA	
Switching Frequency	<25HZ		<25HZ	
Response Time	10ms/10ms		10ms/10ms	
Switching Hysteresis	<15%(Sr)		<15%(Sr)	
Repeat Accuracy	<1.0%(Sr)		<1.0%(Sr)	
Protection Category	IP67		IP67	
Operating Temperature	-25°C - +70°C		-25°C - +70°C	
Temperature Drift	<10%(Sr)		<10%(Sr)	
Short Circuit Protection	NO		NO	
Overload Trip Point	-		-	
Time Delay Before Availability	160MT		160MT	
EMC	RFI>10V/m / EFT>1KV / ESD>8KV (contact)		RFI>10V/m / EFT>1KV / ESD>8KV (contact)	
Shock / Vibration	IEC 60947-5-2,Part 7.4.1 / IEC 60947-5-2,Part 7.4.2		IEC 60947-5-2,Part 7.4.1 / IEC 60947-5-2,Part 7.4.2	
Material Active Face	SUS 303 stainless steel		SUS 303 stainless steel	
DC 3 wire 10-30V NPN N.O. FERROUS ONY SENSING				
DC 3 wire 10-30V NPN N.C. FERROUS ONY SENSING				
DC 3 wire 10-30V PNP N.O. FERROUS ONY SENSING				
DC 3 wire 10-30V PNP N.C. FERROUS ONY SENSING				
DC 3 wire 10-30V NPN N.O. NON-FERROUS ONY SENSING				
DC 3 wire 10-30V NPN N.C. NON-FERROUS ONY SENSING				
DC 3 wire 10-30V PNP N.O. NON-FERROUS ONY SENSING				
DC 3 wire 10-30V PNP N.C. NON-FERROUS ONY SENSING				
AC 2 wire 20-250V N.O. FERROUS ONY SENSING	FCS1-1805A-A3S2/FE-W	11 FCS2-1808A-A3S2/FE-W	FCS1-1805A-A3L2/FE-W	11 FCS2-1808A-A3L2/FE-W
AC 2 wire 20-250V N.C. FERROUS ONY SENSING	FCS1-1805A-B3S2/FE-W	12 FCS2-1808A-B3S2/FE-W	FCS1-1805A-B3L2/FE-W	12 FCS2-1808A-B3L2/FE-W
AC 2 wire 20-250V N.O. NON-FERROUS ONY SENSING	FCS1-1805A-A3S2/NFE-W	11 FCS2-1808A-A3S2/NFE-W	FCS1-1805A-A3L2/NFE-W	11 FCS2-1808A-A3L2/NFE-W
AC 2 wire 20-250V N.C. NON-FERROUS ONY SENSING	FCS1-1805A-B3S2/NFE-W	12 FCS2-1808A-B3S2/NFE-W	FCS1-1805A-B3L2/NFE-W	12 FCS2-1808A-B3L2/NFE-W
AC/DC 2 wire 20-250V N.O. FERROUS ONY SENSING				
AC/DC 2 wire 20-250V N.C. FERROUS ONY SENSING				
AC/DC 2 wire 20-250V N.O. NON-FERROUS ONY SENSING				
AC/DC 2 wire 20-250V N.C. NON-FERROUS ONY SENSING				
Remark	xxxx-xxxxx-xxxx/FE → Target material: Ferrous xxxx-xxxxx-xxxx/NFE → Target material: Non-Ferrous		Correction factors	
Cable 2M (PVC)	5.8Ø3x0.5		5.8Ø3x0.5	
Weight	Approx.132 g	Approx.134 g	Approx.153 g	Approx.144 g

Series	Mild steel	Stainless steel	Aluminum	Copper	Brass
FE	1	0.7-0.9	0	0	0
NFE	0	0	1	1.1	0.9

AC METAL FACE FERROUS/NON-FERROUS SENSING (Teflon Coating)

M 18		M 18		M 18
●	○	●	○	●
5 mm	8 mm	5 mm	8mm	5 mm
SUS 303 stainless steel		SUS 303 stainless steel		SUS 303 stainless steel
●		●		●

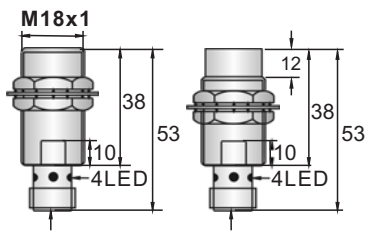

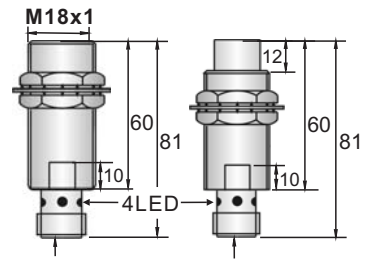

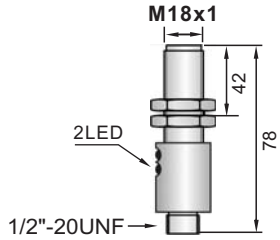

20-250VAC	20-250VAC	20-250VAC
-	-	-
<1.8mA	<1.8mA	<1.8mA
400mA	400mA	400mA
<1.8mA	<1.8mA	<1.8mA
5A(20ms)	5A(20ms)	5A(20ms)
5mA	5mA	5mA
<8VAC AT 200MA	<8VAC AT 200MA	<8VAC AT 200MA
<25HZ	<25HZ	<25HZ
10ms/10ms	10ms/10ms	10ms/10ms
<15%(Sr)	<15%(Sr)	<15%(Sr)
<1.0%(Sr)	<1.0%(Sr)	<1.0%(Sr)
IP67	IP67	IP67
-25°C - +70°C	-25°C - +70°C	-25°C - +70°C
<10%(Sr)	<10%(Sr)	<10%(Sr)
NO	NO	NO
-	-	-
160MT	160MT	160MT
RFI>10V/m / EFT>1KV / ESD>8KV (contact)	RFI>10V/m / EFT>1KV / ESD>8KV (contact)	RFI>10V/m / EFT>1KV / ESD>8KV (contact)
IEC 60947-5-2,Part 7.4.1 / IEC 60947-5-2,Part 7.4.2	IEC 60947-5-2,Part 7.4.1 / IEC 60947-5-2,Part 7.4.2	IEC 60947-5-2,Part 7.4.1 / IEC 60947-5-2,Part 7.4.2
SUS 303 stainless steel	SUS 303 stainless steel	SUS 303 stainless steel

FCS1-1805A-AUS3/FE-W	56	FCS2-1808A-AUS3/FE-W	FCS1-1805A-AUL3/FE-W	56	FCS2-1808A-AUL3/FE-W	FCS1-1805A-AUS3/2/FE-W	56
FCS1-1805A-BUS3/FE-W	56	FCS2-1808A-BUS3/FE-W	FCS1-1805A-BUL3/FE-W	56	FCS2-1808A-BUL3/FE-W	FCS1-1805A-BUS3/2/FE-W	56
FCS1-1805A-AUS3/NFE-W	56	FCS2-1808A-AUS3/NFE-W	FCS1-1805A-AUL3/NFE-W	56	FCS2-1808A-AUL3/NFE-W	FCS1-1805A-AUS3/2/NFE-W	56
FCS1-1805A-BUS3/NFE-W	56	FCS2-1808A-BUS3/NFE-W	FCS1-1805A-BUL3/NFE-W	56	FCS2-1808A-BUL3/NFE-W	FCS1-1805A-BUS3/2/NFE-W	56

xxxx-xxxxx-xxxx/FE → Target material: Ferrous

xxxx-xxxxx-xxxx/NFE → Target material: Non-Ferrous

Correction factors

Series	Mild steel	Stainless steel	Aluminum	Copper	Brass
FE	1	0.7-0.9	0	0	0
NFE	0	0	1	1.1	0.9

Approx.50 g	Approx.50 g	Approx.94 g	Approx.91 g	Approx.94 g

AC METAL FACE FERROUS/NON-FERROUS SENSING (Teflon Coating)

M 18		
●	○	
5 mm	8 mm	
SUS 303 stainless steel		
●		
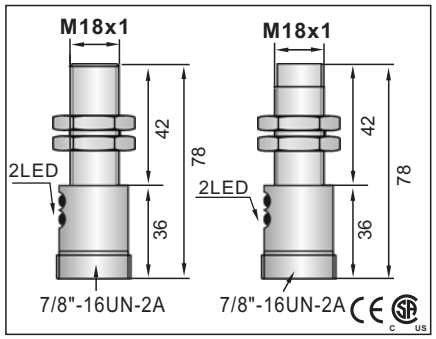		
20-250VAC		
-		
<1.8mA		
400mA		
<1.8mA		
5A(20ms)		
5mA		
<8VAC AT 200MA		
<25HZ		
10ms/10ms		
<15%(Sr)		
<1.0%(Sr)		
IP67		
-25°C - +70°C		
<10%(Sr)		
NO		
-		
160MT		
RFI>10V/m / EFT>1KV / ESD>8KV (contact)		
IEC 60947-5-2,Part 7.4.1 / IEC 60947-5-2,Part 7.4.2		
SUS 303 stainless steel		
FCS1-1805A-AZS3/2/FE-W	65	FCS2-1808A-AZS3/2/FE-W
FCS1-1805A-BZS3/2/FE-W	65	FCS2-1808A-BZS3/2/FE-W
FCS1-1805A-AZS3/2/NFE-W	65	FCS2-1808A-AZS3/2/NFE-W
FCS1-1805A-BZS3/2/NFE-W	65	FCS2-1808A-BZS3/2/NFE-W
Approx.251 g		

M 18		
●	○	
5 mm	8 mm	
SUS 303 stainless steel		
●		
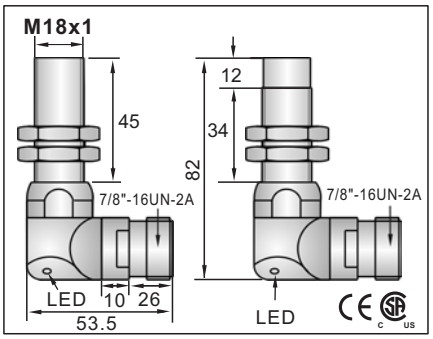		
20-250VAC		
-		
<1.8mA		
400mA		
<1.8mA		
5A(20ms)		
5mA		
<8VAC AT 400MA		
<25HZ		
10ms/10ms		
<15%(Sr)		
<1.0%(Sr)		
IP67		
-25°C - +70°C		
<10%(Sr)		
NO		
-		
160MT		
RFI>10V/m / EFT>1KV / ESD>8KV (contact)		
IEC 60947-5-2,Part 7.4.1 / IEC 60947-5-2,Part 7.4.2		
SUS 303 stainless steel		
FCS1-1805A-AZL3Y/FE-W	65	FCS2-1808A-AZL3Y/FE-W
FCS1-1805A-BZL3Y/FE-W	65	FCS2-1808A-BZL3Y/FE-W
FCS1-1805A-AZL3Y/NFE-W	65	FCS2-1808A-AZL3Y/NFE-W
FCS1-1805A-BZL3Y/NFE-W	65	FCS2-1808A-BZL3Y/NFE-W
xxxx-xxxxx-xxxx/FE → Target material: Ferrous xxxx-xxxxx-xxxx/NFE → Target material: Non-Ferrous		
Approx.251 g	Approx.283 g	

M 18		
●	○	
5 mm	8 mm	
SUS 303 stainless steel		
●		
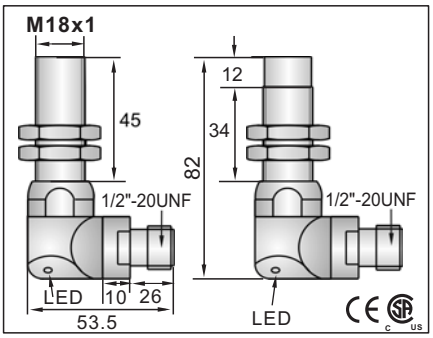		
20-250VAC		
-		
<1.8mA		
400mA		
<1.8mA		
5A(20ms)		
5mA		
<8VAC AT 400MA		
<25HZ		
10ms/10ms		
<15%(Sr)		
<1.0%(Sr)		
IP67		
-25°C - +70°C		
<10%(Sr)		
NO		
-		
160MT		
RFI>10V/m / EFT>1KV / ESD>8KV (contact)		
IEC 60947-5-2,Part 7.4.1 / IEC 60947-5-2,Part 7.4.2		
SUS 303 stainless steel		
FCS1-1805A-AUL3Y/FE-W	56	FCS2-1808A-AUL3Y/FE-W
FCS1-1805A-BUL3Y/FE-W	56	FCS2-1808A-BUL3Y/FE-W
FCS1-1805A-AUL3Y/NFE-W	56	FCS2-1808A-AUL3Y/NFE-W
FCS1-1805A-BUL3Y/NFE-W	56	FCS2-1808A-BUL3Y/NFE-W
Correction factors		
Approx.251 g	Approx.283 g	

Correction factors

Series	Mild steel	Stainless steel	Aluminum	Copper	Brass
FE	1	0.7-0.9	0	0	0
NFE	0	0	1	1.1	0.9

Note:
Coming Soon : Part numbers with underline

AC METAL FACE FERROUS/NON-FERROUS SENSING (Teflon Coating)

M 18	M 18	M 30	
●	●	●	○
5 mm	5 mm	10 mm	15 mm
SUS 303 stainless steel	SUS 303 stainless steel	SUS 303 stainless steel	
●	●	●	

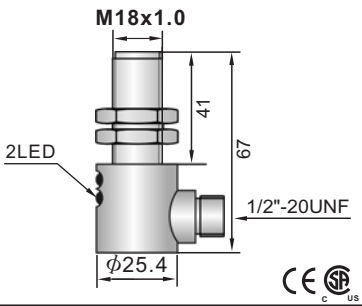

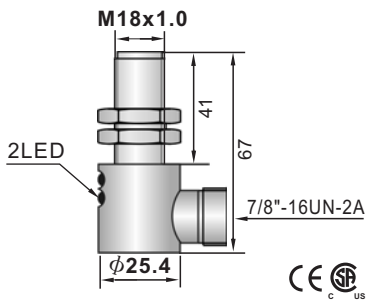

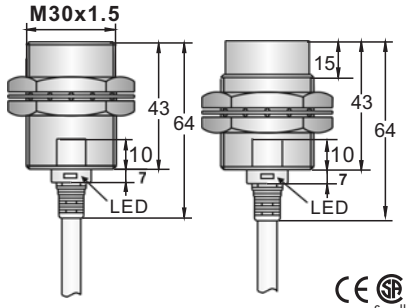

M 18	M 18	M 30	
20-250VAC	20-250VAC	20-250VAC	
-	-	-	
<1.8mA	<1.8mA	<1.8mA	
400mA	400mA	400mA	
<1.8mA	<1.8mA	<1.8mA	
5A(20ms)	5A(20ms)	5A(20ms)	
5mA	5mA	5mA	
<8VAC AT 200MA	<8VAC AT 200MA	<8VAC at 400MA	
<25HZ	<25HZ	<25HZ	
10ms/10ms	10ms/10ms	10ms/10ms	
<15%(Sr)	<15%(Sr)	<15%(Sr)	
<1.0%(Sr)	<1.0%(Sr)	<1.0%(Sr)	
IP67	IP67	IP67	
-25°C - +70°C	-25°C - +70°C	-25°C - +70°C	
<10%(Sr)	<10%(Sr)	<10%(Sr)	
NO	NO	NO	
-	-	-	
160MT	160MT	160MT	
RFI>10V/m / EFT>1KV / ESD>8KV (contact)	RFI>10V/m / EFT>1KV / ESD>8KV (contact)	RFI>8V/m / EFT>1KV / ESD>8KV (contact)	
IEC 60947-5-2,Part 7.4.1 / IEC 60947-5-2,Part 7.4.2	IEC 60947-5-2,Part 7.4.1 / IEC 60947-5-2,Part 7.4.2	IEC 60947-5-2,Part 7.4.1 / IEC 60947-5-2,Part 7.4.2	
SUS 303 stainless steel	SUS 303 stainless steel	SUS 303 stainless steel	
FCS1-1805A-AUS3Y/2/FE-W 56	FCS1-1805A-AZS3Y/2/FE-W 65	FCS1-3010A-A3S2/FE-W 11 FCS2-3015A-A3S2/FE-W	
FCS1-1805A-BUS3Y/2/FE-W 56	FCS1-1805A-BZS3Y/2/FE-W 65	FCS1-3010A-B3S2/FE-W 12 FCS2-3015A-B3S2/FE-W	
FCS1-1805A-AUS3Y/2/NFE-W 56	FCS1-1805A-AZS3Y/2/NFE-W 65	FCS1-3010A-A3S2/NFE-W 11 FCS2-3015A-A3S2/NFE-W	
FCS1-1805A-BUS3Y/2/NFE-W 56	FCS1-1805A-BZS3Y/2/NFE-W 65	FCS1-3010A-B3S2/NFE-W 12 FCS2-3015A-B3S2/NFE-W	
	xxxx-xxxxx-xxxx/FE → Target material: Ferrous xxxx-xxxxx-xxxx/NFE → Target material: Non-Ferrous	Correction factors	
Approx.251 g	Approx.260 g	5.8ϕ3x0.5	
		Approx.217 g	Approx.207 g

Series	Mild steel	Stainless steel	Aluminum	Copper	Brass
FE	1	0.7-0.9	0	0	0
NFE	0	0	1	1.1	0.9

Note:
Coming Soon : Part numbers with underline

AC METAL FACE FERROUS/NON-FERROUS SENSING (Teflon Coating)

M 30			M 30			M 30		
●	○		●	○		●	○	
10 mm	15 mm		10 mm	15 mm		10 mm	15 mm	
SUS 303 stainless steel			SUS 303 stainless steel			SUS 303 stainless steel		
●			●			●		

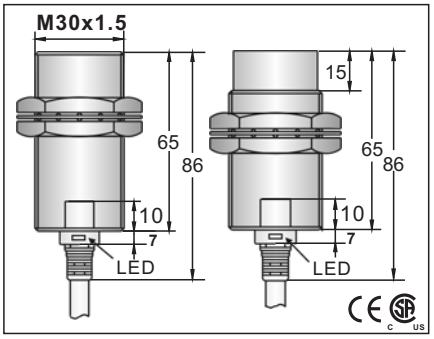

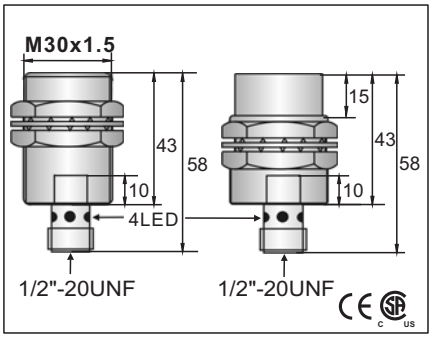

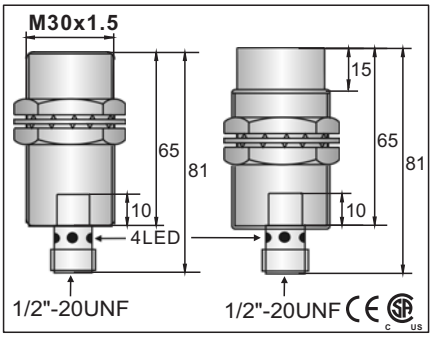

20-250VAC			20-250VAC			20-250VAC		
-			-			-		
<1.8mA			<1.8mA			<1.8mA		
400mA			400mA			400mA		
<1.8mA			<1.8mA			<1.8mA		
5A(20ms)			5A(20ms)			5A(20ms)		
5mA			5mA			5mA		
<8VAC at 400MA			<8VAC AT 400MA			<8VAC AT 400MA		
<25HZ			<25HZ			<25HZ		
10ms/10ms			10ms/10ms			10ms/10ms		
<15%(Sr)			<15%(Sr)			<15%(Sr)		
<1.0%(Sr)			<1.0%(Sr)			<1.0%(Sr)		
IP67			IP67			IP67		
-25 °C - +70 °C			-25 °C - +70 °C			-25 °C - +70 °C		
<10%(Sr)			<10%(Sr)			<10%(Sr)		
NO			NO			NO		
-			-			-		
160MT			160MT			160MT		
RFI>8V/m / EFT>1KV / ESD>8KV (contact)			RFI>8V/m / EFT>1KV / ESD>8KV (contact)			RFI>8V/m / EFT>1KV / ESD>8KV (contact)		
IEC 60947-5-2,Part 7.4.1 / IEC 60947-5-2,Part 7.4.2			IEC 60947-5-2,Part 7.4.1 / IEC 60947-5-2,Part 7.4.2			IEC 60947-5-2,Part 7.4.1 / IEC 60947-5-2,Part 7.4.2		
SUS 303 stainless steel			SUS 303 stainless steel			SUS 303 stainless steel		
FCS1-3010A-A3L2/FE-W	11	FCS2-3015A-A3L2/FE-W	FCS1-3010A-AUS3/FE-W	56	FCS2-3015A-AUS3/FE-W	FCS1-3010A-AUL3/FE-W	56	FCS2-3015A-AUL3/FE-W
FCS1-3010A-B3L2/FE-W	12	FCS2-3015A-B3L2/FE-W	FCS1-3010A-BUS3/FE-W	56	FCS2-3015A-BUS3/FE-W	FCS1-3010A-BUL3/FE-W	56	FCS2-3015A-BUL3/FE-W
FCS1-3010A-A3L2/NFE-W	11	FCS2-3015A-A3L2/NFE-W	FCS1-3010A-AUS3/NFE-W	56	FCS2-3015A-AUS3/NFE-W	FCS1-3010A-AUL3/NFE-W	56	FCS2-3015A-AUL3/NFE-W
FCS1-3010A-B3L2/NFE-W	12	FCS2-3015A-B3L2/NFE-W	FCS1-3010A-BUS3/NFE-W	56	FCS2-3015A-BUS3/NFE-W	FCS1-3010A-BUL3/NFE-W	56	FCS2-3015A-BUL3/NFE-W

xxxx-xxxxx-xxxx/FE → Target material: Ferrous

xxxx-xxxxx-xxxx/NFE → Target material: Non-Ferrous

Correction factors

Series	Mild steel	Stainless steel	Aluminum	Copper	Brass
FE	1	0.7-0.9	0	0	0
NFE	0	0	1	1.1	0.9

5.8∅3x0.5							
Approx.227 g		Approx.217 g	Approx.111 g		Approx.121 g	Approx.187 g	Approx.179 g

Note:
Coming Soon : Part numbers with underline

AC METAL FACE FERROUS/NON-FERROUS SENSING (Teflon Coating)

M 30			M 30			M 30		
●	○		●	○		●	○	
10 mm	15 mm		10 mm	15 mm		10 mm	15 mm	
SUS 303 stainless steel			SUS 303 stainless steel			SUS 303 stainless steel		
●			●			●		
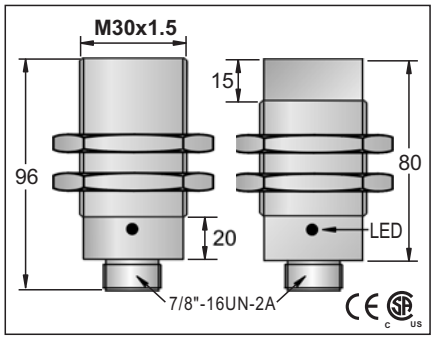			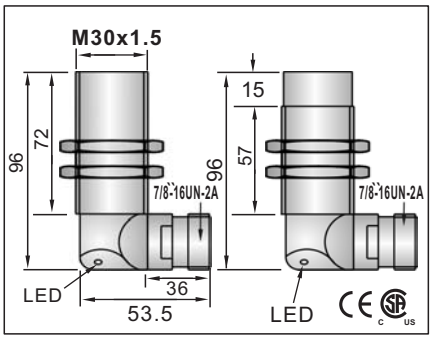			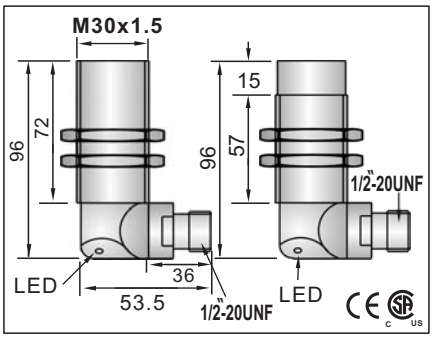		
20-250VAC			20-250VAC			20-250VAC		
-			-			-		
<1.8mA			<1.8mA			<1.8mA		
400mA			400mA			400mA		
<1.8mA			<1.8mA			<1.8mA		
5A(20ms)			5A(20ms)			5A(20ms)		
5mA			5mA			5mA		
<8VAC AT 200MA			<8VAC AT 400MA			<8VAC AT 400MA		
<25HZ			<25HZ			<25HZ		
10ms/10ms			10ms/10ms			10ms/10ms		
<15%(Sr)			<15%(Sr)			<15%(Sr)		
<1.0%(Sr)			<1.0%(Sr)			<1.0%(Sr)		
IP67			IP67			IP67		
-25°C - +70°C			-25°C - +70°C			-25°C - +70°C		
<10%(Sr)			<10%(Sr)			<10%(Sr)		
NO			NO			NO		
-			-			-		
160MT			160MT			160MT		
RFI>8V/m / EFT>1KV / ESD>8KV (contact)			RFI>8V/m / EFT>1KV / ESD>8KV (contact)			RFI>8V/m / EFT>1KV / ESD>8KV (contact)		
IEC 60947-5-2,Part 7.4.1 / IEC 60947-5-2,Part 7.4.2			IEC 60947-5-2,Part 7.4.1 / IEC 60947-5-2,Part 7.4.2			IEC 60947-5-2,Part 7.4.1 / IEC 60947-5-2,Part 7.4.2		
SUS 303 stainless steel			SUS 303 stainless steel			SUS 303 stainless steel		
FCS1-3010A-AZL3/FE-W	65	FCS2-3015A-AZL3/FE-W	FCS1-3010A-AZL3Y/FE-W	65	FCS2-3015A-AZL3Y/FE-W	FCS1-3010A-AUL3Y/FE-W	56	FCS2-3015A-AUL3Y/FE-W
FCS1-3010A-BZL3/FE-W	65	FCS2-3015A-BZL3/FE-W	FCS1-3010A-BZL3Y/FE-W	65	FCS2-3015A-BZL3Y/FE-W	FCS1-3010A-BUL3Y/FE-W	56	FCS2-3015A-BUL3Y/FE-W
FCS1-3010A-AZL3/NFE-W	65	FCS2-3015A-AZL3/NFE-W	FCS1-3010A-AZL3Y/NFE-W	65	FCS2-3015A-AZL3Y/NFE-W	FCS1-3010A-AUL3Y/NFE-W	56	FCS2-3015A-AUL3Y/NFE-W
FCS1-3010A-BZL3/NFE-W	65	FCS2-3015A-BZL3/NFE-W	FCS1-3010A-BZL3Y/NFE-W	65	FCS2-3015A-BZL3Y/NFE-W	FCS1-3010A-BUL3Y/NFE-W	56	FCS2-3015A-BUL3Y/NFE-W
			xxxx-xxxxx-xxxx/FE → Target material: Ferrous xxxx-xxxxx-xxxx/NFE → Target material: Non-Ferrous			Correction factors		
Approx.187 g		Approx.179 g	Approx.311 g		Approx.356 g	Approx.311 g		Approx.356 g

Series	Mild steel	Stainless steel	Aluminum	Copper	Brass
FE	1	0.7-0.9	0	0	0
NFE	0	0	1	1.1	0.9

Note:
Coming Soon : Part numbers with underline

AC METAL FACE FERROUS/NON-FERROUS SENSING (Teflon Coating)

M 30	M 30
●	●
10 mm	10 mm
SUS 303 stainless steel	SUS 303 stainless steel
●	●
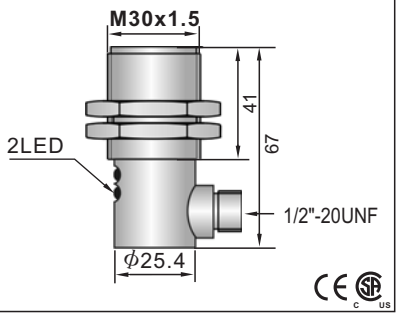	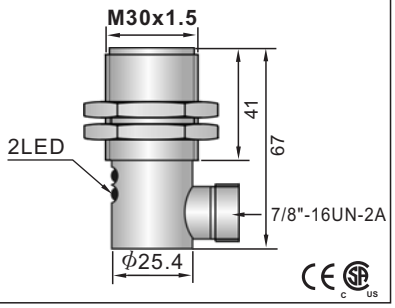
20-250VAC	20-250VAC
-	-
<1.8mA	<1.8mA
400mA	400mA
<1.8mA	<1.8mA
5A(20ms)	5A(20ms)
5mA	5mA
<8VAC AT 200MA	<8VAC AT 400MA
<25HZ	<25HZ
10ms/10ms	10ms/10ms
<15%(Sr)	<15%(Sr)
<1.0%(Sr)	<1.0%(Sr)
IP67	IP67
-25°C - +70°C	-25°C - +70°C
<10%(Sr)	<10%(Sr)
NO	NO
-	-
160MT	160MT
RFI>8V/m / EFT>1KV / ESD>8KV (contact)	RFI>8V/m / EFT>1KV / ESD>8KV (contact)
IEC 60947-5-2,Part 7.4.1 / IEC 60947-5-2,Part 7.4.2	IEC 60947-5-2,Part 7.4.1 / IEC 60947-5-2,Part 7.4.2
SUS 303 stainless steel	SUS 303 stainless steel

FCS1-3010A-AUL3Y/2/FE-W	56	FCS1-3010A-AZL3Y/2/FE-W	65
FCS1-3010A-BUL3Y/2/FE-W	56	FCS1-3010A-BZL3Y/2/FE-W	65
FCS1-3010A-AUL3Y/2/NFE-W	56	FCS1-3010A-AZL3Y/2/NFE-W	65
FCS1-3010A-BUL3Y/2/NFE-W	56	FCS1-3010A-BZL3Y/2/NFE-W	65

xxxx-xxxxx-xxxx/FE → Target material: Ferrous

xxxx-xxxxx-xxxx/NFE → Target material: Non-Ferrous

Approx.250 g	Approx.250 g

Note:
Coming Soon : Part numbers with underline